LARGE INSULATED TOP COVER FOOR TEN FRAME HIVE

Reasons for using a larger than normal top cover:

- ☐ It will fit over insulation that can be placed on the sides and rear of the hive.
- ☐ The deeper sides will allow room to place a ventilation/insulation board on top of the inner cover during winter.
- ☐ The longer length will allow for better ventilation of the hive when using a ventilation / insulation board.
- ☐ The insulated top cover helps keep the hive cooler on hot days in the summer.

INSIDE 18½"X 22½ "

OUTSIDE 20" X 24'

SIDES 3 ½ "

Materials Req'd:

2 Pcs. 18 ½" x 3 ½ " x ¾ "

2 Pcs. 24" x 3 ½" x ¾"

1 Pc. Plywood or other avail.
24" x 20" x (3/16" - ¼ ").
1 Pc. Insulation, Styrofoam
24" x 20" x 1"

1 Pc. 24" x 30" Alum sheet metal
Outer cover

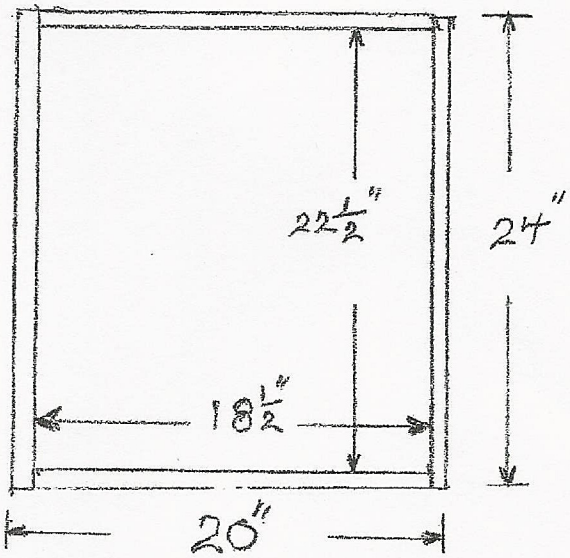

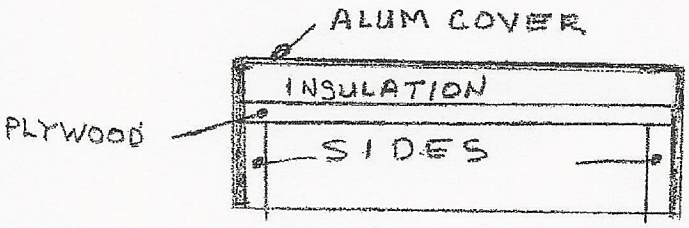

Brooke S. Binder

LARGE INSULATED TOP COVER FOR HIVES

Reasons for using a larger insulated top cover:

The larger than normal size allows top cover to fit over one inch thick Styrofoam placed on the sides of the sides during the winter and helps bees to ventilate hive in the winter.

Insulation in the top cover also helps bees keep hive cooler on hot sunny days and the larger size helps the bees with ventilation in the summer.

INSIDE MEASUREMENTS: 19" X 23"

OUTSIDE MEASUREMENTS: 20 ½" X 24 ½"

Materials required:

2 pcs. 19" x 3 ½" x ¾ "

2 pcs. 24 ½ x 3 ½ x ¾ "

1 pcs. 24 ½ " x 20 ½ x (¼"-½ ") Inside top
Plywood or other suitable material

1 pcs. 24 ½" x 20 ½" x 1" Styrofoam
Aka blueboard

1 pcs. Aluminum sheet metal cover
27" x 30" x (whatever thickness is avail.)

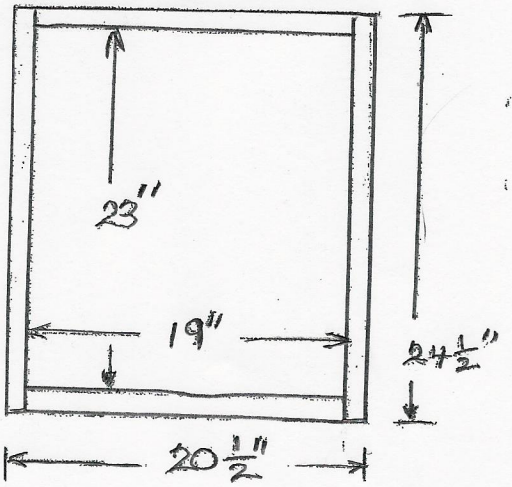

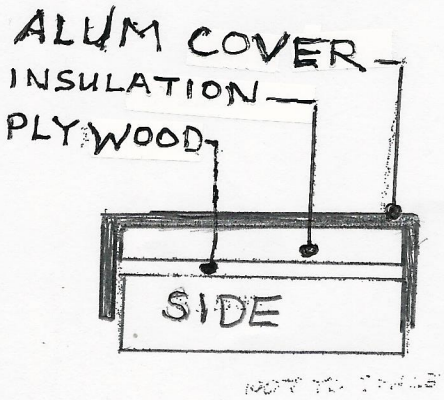

Brooke S. Binder Jr.